AOD-E TCU LG3.4 EFI Mag

File Name: Gearbox Wiring Diagram LG3.3 EFI Mag
Harness Required: G05 & G06
Last Changed: 08/07/2009

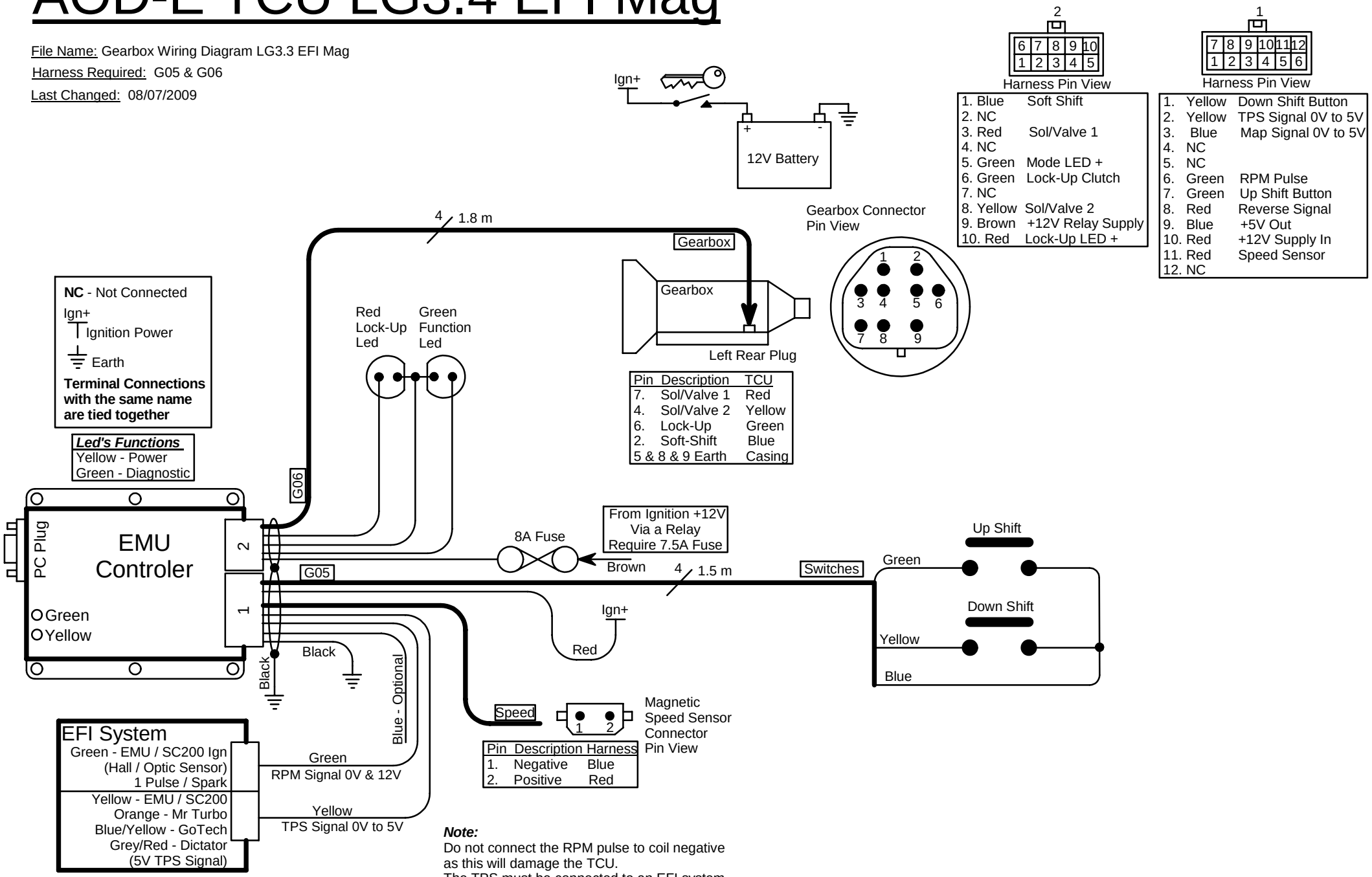

Note:
Do not connect the RPM pulse to coil negative as this will damage the TCU.
The TPS must be connected to an EFI system which supplies the 5V and ground signal